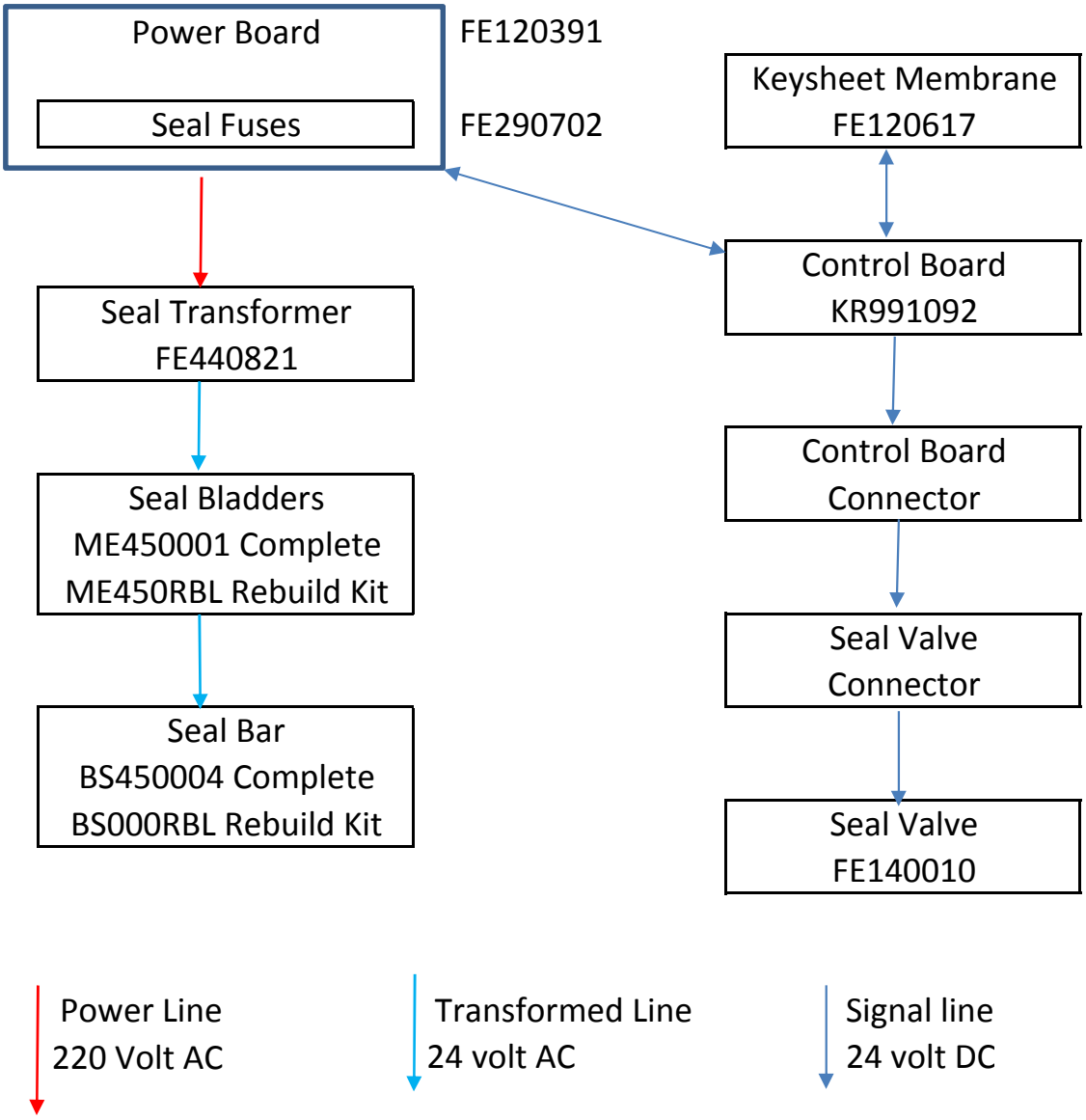MVS 52XP Seal 220 volt
(from serial 52101)